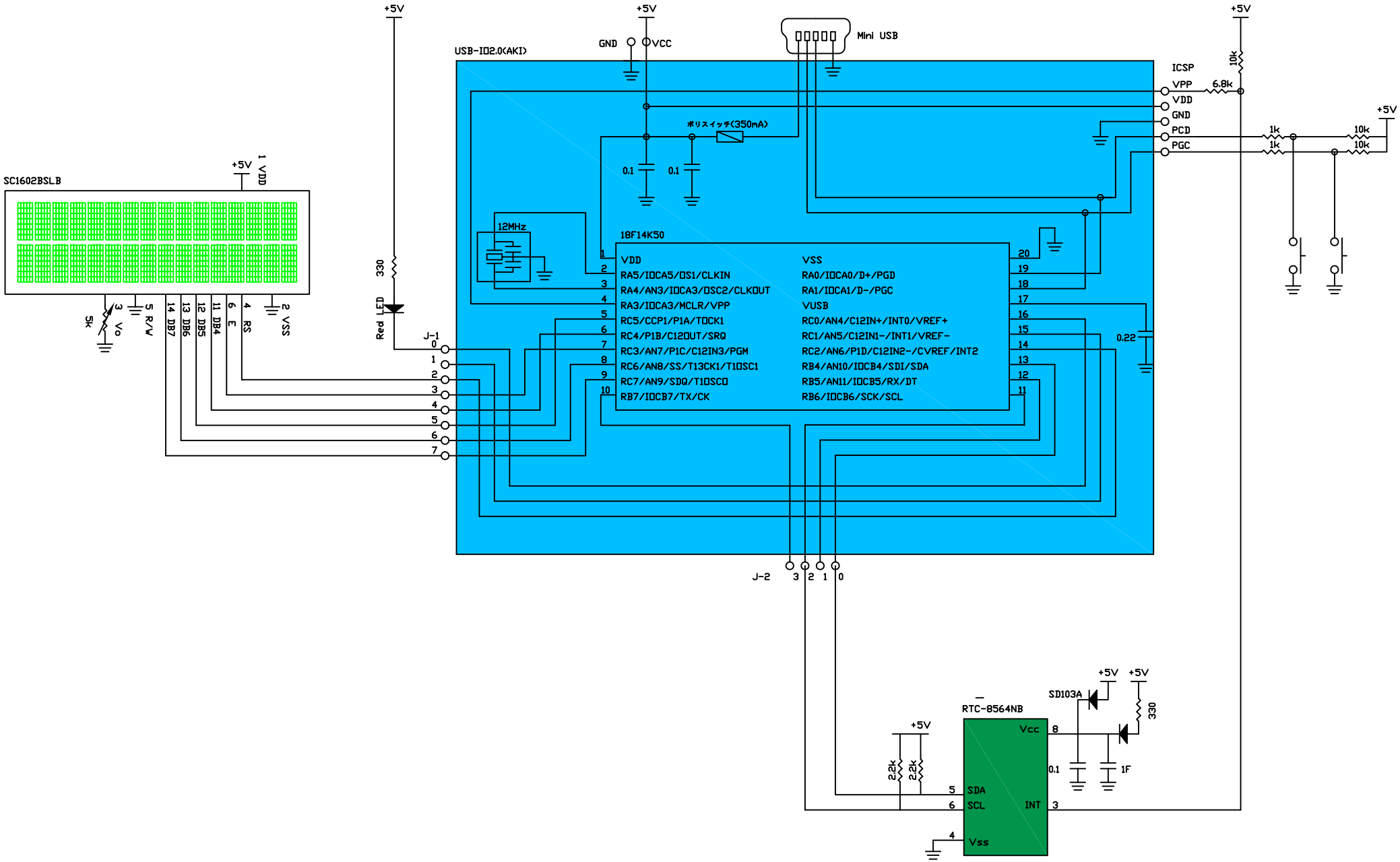
SC1602BSLB
+5V
1 VDD
5k
3 Vo
5 R/W
14 DB7
13 DB6
12 DB5
11 DB4
6 E
4 RS
2 VSS
330
Red LED
J-1
USB-IO2.0(AKI)
GND
VCC
Mini USB
ポリスイッチ(350mA)
0.1
12MHz
18F14K50
VDD
RA5/IOCA5/OS1/CLKIN
RA4/AN3/IOCA3/OSC2/CLKOUT
RA3/IOCA3/MCLR/VPP
RC5/CCP1/P1A/TOCK1
RC4/P1B/C12OUT/SRQ
RC3/AN7/P1C/C12IN3/PGM
RC6/AN8/SS/T13CK1/T1OSC1
RC7/AN9/SDQ/T1OSCO
RB7/IOCB7/TX/CK
VSS
RA0/IOCA0/D+/PGD
RA1/IOCA1/D-/PGC
VUSB
RC0/AN4/C12IN+/INT0/VREF+
RC1/AN5/C12IN1-/INT1/VREF-
RC2/AN6/P1D/C12IN2-/CVREF/INT2
RB4/AN10/IOCB4/SDI/SDA
RB5/AN11/IOCB5/RX/DT
RB6/IOCB6/SCK/SCL
0.22
ICSP
VPP
VDD
GND
PCD
PGC
6.8k
10k
1k
J-2
RTC-8564NB
Vcc
SDA
SCL
INT
Vss
SD103A
2.2k
1F